Solar Energy Handbook

SOLAFRICA

GO SOLAR!

IMPRINT

Edition	**Revised and updated second edition, 2022**
First edition	**June 2015, developed in collaboration with Youth & United Nations Global Alliance (YUNGA), World Organization of the Scout Movement (WOSM) and Greenpeace**

Main authors	**Stefanie Luginbühl Alassane, environmental instructor, Solafrica** **Dr. Michael Götz, solar expert**
Revision and proofreading	**Martin Wanner**
Reference address	SOLAFRICA **Bollwerk 35, 3011 Berne, Switzerland** **info@solafrica.ch, 0041 31 312 83 31** **www.solafrica.ch/scout-badge** **Feedback may be sent to: scoutsgosolar@solafrica.ch**
Layout and graphics	**Dino Carini**

Many thanks go to	**Simone Pulfer, Joshiah Ramogi, Vânia Stolze and Kuno Roth for feedback and concept development.** **Retze Koen for solar technical advice.** **Kandersteg International Scout Centre for hosting and support.**

Copyright indications	**This document can be used and adapted for non-commercial uses. For other uses, please contact scoutsgosolar@solafrica.ch.**

SOLAFRICA

CONTENTS

1. INTRODUCTION 3

1.1 Welcome 3

1.2 The different manuals and collections of experiments of Scouts go Solar 4

The Handbook 4
The SgS Experiments Database 5
The Workbook 5
The SgS Challenge Implementation Manual 5
The SgS Challenge Action Kit 5
Centre Solar Badge 5

1.6 Creating behavioural change 5

2. SOME THEORY (Introduction to solar energy) 6

2.1 Energy 6

What is energy? 6
Use and production of energy 6
Renewable and non-renewable energies 7
Saving energy 8

2.2 All about solar energy 9

How much solar energy reaches the earth? 9
How can we use solar energy? 10
Producing heat from sunlight 10
Cooking and conserving food 11
Producing electricity from sunlight 12
Photovoltaic use of solar energy 12
Concentrated solar thermal energy 13
Direct use vs. storage 14
Misconceptions about photovoltaic solar energy 14

2.3 Impacts of the sun on health and environment 15

The greenhouse effect 15
Our health 16

2.4 Go solar! 17

3. SAFETY AND FIRST AID 18

3.1 Be safe and sound 18

General remarks for a safe execution of the activities 18
Rules for working with electrical equipment 19

3.2 First aid 20

Electrical shock 20
Burning 20
Sunstroke 20
Risk factors and precautions 21

4. EXAMPLES OF EXPERIMENTS AND WORKSHOP STATIONS 22

4.1 How can you best prepare your group activities to promote behavioural change? 22

4.2 Tips for undertaking activities with your group 22

4.3 Examples of activities/experiments 23

4.4 Example of an introduction workshop /roadshow 24

5. Further information (and internet links) 25

SOLAFRICA

1. INTRODUCTION

1.1 Welcome

This handbook is designed to help create awareness, increase knowledge and develop the skills of children and young people with regard to solar energy. It aims to help group leaders or teachers to identify, plan, prepare for and realise solar learning opportunities. If you cannot find what you are looking for in this handbook, have a look at the links section, the SgS Experiments Database or contact us at scoutsgosolar@solafrica.ch.

Day and night are defined by sunlight or its absence. The sun is fundamental to our life. Without it, no plants would grow, there would be no photosynthesis to produce the oxygen we breathe, we would freeze and the darkness would depress us.

Therefore, the sun is the very first source of energy that made life on earth possible. Nevertheless, most people are not aware of how dependent we are on the sun, and how underutilised this form of energy still is.

We invite you to get active and use the power of the sun.
Maybe you can find some solutions for your own life or your community. At the end, every saved or renewably produced unit of energy means less pollution and a better future for all of us.

We invite you to share your knowledge about solar energy.
Tell everyone what you have experienced. Show how you use the power of the sun. And invite others to join you. Get inspired.

We invite you to help others to follow your example and find their own unique way of using solar energy.
Be an inspiration for others and support them as much as you can.

1.2 The different manuals and collections of solar experiments

OBJECTIVES

The general objective of all publications consists in promoting interest and understanding about the use of renewable energies as a strategy to protect the environment and to respond to climate change.

You may also acquire:

- Teamwork and independent study skills
- Imagination and creativity
- Observation skills
- Cultural and environmental awareness
- Numerical and literacy skills
- Technical skills
- Research skills
- Presentation and public speaking skills
- The ability to present an argument and debate

The Handbook

In the first part, you will find **information** about the project itself and how it is integrated into the Earth Tribe. We also treat the project's relation to the SDGs.

In the second part, you will find **important background information** about solar energy ('Introduction to solar energy'), why it plays a central role in our lives, some technical information about its use and the risks related to the sun.

In the third part, you will find **information** about safety and first aid.

In the fourth part, you will find an introduction to a wide range of **activities** as well as **games**. (The details are to be found in the SgS Experiments Database and in the Workbook.)

At the end of the Handbook, you will find **additional resources and links**.

The Scouts go Solar Experiments Database

While the experiments, games, tools and workshop stations are only presented as introduction (Handbook) and in a shorter version (Workbook), the same (and additional) data can be found in more detail on the growing SgS Experiments Database. The Database is the place where you can add comments and pictures after trying out an experiment with your group or even upload completely new experiments for sharing them with other Solar Scouts!

You find the Database on the Facebook page of Earth Tribe, following this link:
https://www.facebook.com/groups/TheEarthTribe/learning_content

The Workbook

The workbook compiles information from the Experiments Database and other experiments in one large downloadable PDF. This is the easiest way to 'carry' the texts about the experiments to areas without internet access.

The SgS Challenge Implementation Manual

The SgS Challenge Implementation Manual is a document edited by Earth Tribe, explaining in more detail the background of the Challenge, the personal learning path etc. It can be found on *https://earthtribe.scout.org/challenges/scouts-go-solar*.

The SgS Challenge Action Kit

The Challenge Badge Action Kit is a document edited by Earth Tribe, providing more detailed information about solar activities for the different age groups, templates, etc. It can be found on *https://earthtribe.scout.org/challenges/scouts-go-solar*.

Centre Solar Badge

While the official Earth Tribe / SgS Challenge Badge can only be obtained following the steps defined by your National Scout Organisation in coordination with Earth Tribe and WOSM, some Scout Centres (like the Kandersteg International Scout Centre in Switzerland) hand out their own Centre Solar Badge. It can be obtained by following an Introduction Workshop which is organized by the staff of the Centre.

1.3 Creating behavioural change

Past experiences with successful solar youth projects have made it clear that when working with young people and kids, the best learning effects and greatest motivation are achieved when they learn by doing. In the case of solar energy, this might be especially important, as many people lack experience and only have vague ideas about this source of energy and its practicality.

It is crucial that young people have "hands-on" experiences and learn from them. Due to their intense interest in global and environmental matters, young people are usually most motivated if what they learn enables them to do something and to become active themselves. They want to make a difference!

See chapter 4 for concrete tips to promote behavioural change working with your scouts group.

2. SOME THEORY (Introduction to solar energy)

2.1 Energy

What is energy?

Energy is defined as the capacity of a system to perform work. The Greek word “energeia“ means activity or operations.

The different forms of energy include kinetic (movement), potential (stored in an object), thermal (heat), gravitational, sound, light, elastic, electromagnetic, chemical and nuclear energy.

In general, energy can be divided in **Primary energy** (energy form found in nature, without conversion or transformation, e.g. light, heat, coal, crude oil, wind, etc) and **Secondary energy** (energy carriers, e.g. batteries, petrol, etc). **Final energy** is the energy form that human beings use, such as electricity. Final energy can be a Primary energy, or it can be transformed (once or several times) to a Secondary energy (example nuclear power: nuclear energy is transformed into heat (evaporating water) which is transformed into kinetic energy (powering a turbine) which is transformed into electricity in the generator).

Use and production of energy

Every day, we use different forms of energy. Most people relate energy first of all to electricity. But we use energy in many other ways, as well, such as nutritional energy for our bodies, heat for our houses or to offer us mobility. Let’s have a closer look:

The world’s total consumption of energy has increased significantly over the past few decades.

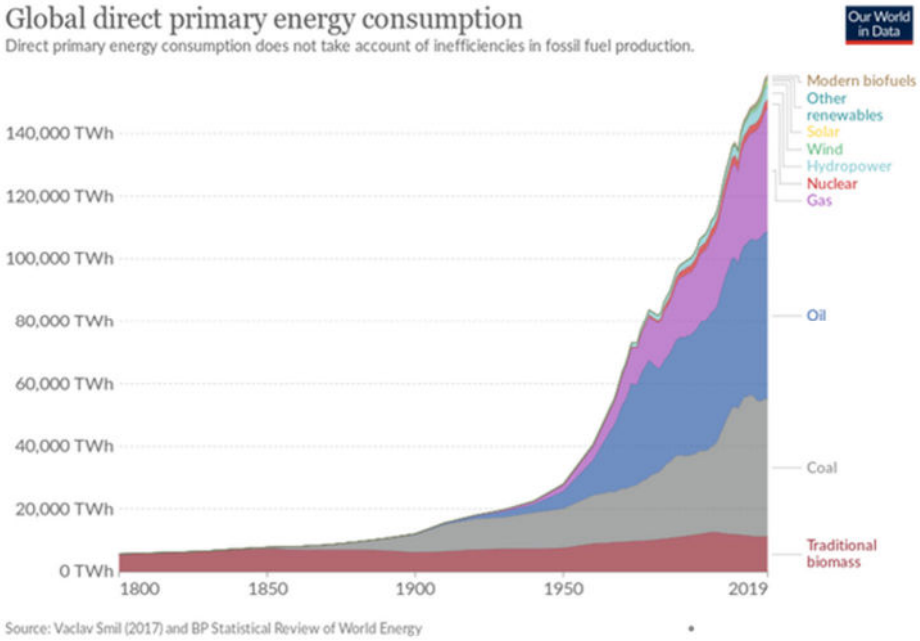

World total primary energy consumption
1800 - 2019 (ourworldindata.org)

The diagram above shows the world’s consumption of Primary energy. In many regions of the world, the consumption of energy is strongly increasing due to the access to electricity and to a ‘modern’ lifestyle, fostering industrial production, population growth and rising mobility.

Compared to coal and fuel, renewable energies are still used too little, despite their enormous potential – they are renewable and will never end.

Renewable and non-renewable energies

Let's have a closer look:

Renewable energy is energy that comes from resources which are constantly replenished (within the duration of a human lifetime).

The most common renewable energies are:

SOLAR GEOTHERMAL BIOMASS HYDROPOWER WIND

All renewable energies covered 15,3% of the world's Primary energy consumption (eia.gov, 2018) and 26,5% of the worlds electricity consumption (iea.org, 2019).

Common non-renewable energies are:

COAL OIL NATURAL GAS NUCLEAR

Independently of the number of years until depletion, depending on non-renewable energies is not a sustainable option. Our energy supply must be transformed to 100% renewables in a foreseeable future, there is no other option. The quicker this transformation happens, the smoother will be the transition.

A comparison of renewable and non-renewable energy:

	Renewable	Non-renewable
Dependency	Dependent on weather (sun/wind), natural resources and technology.	Independent from weather Dependent on natural resources and technology
Cost	Cheaper in the long term Cheaper when taking into account all related costs (e.g. impact on the environment, health, etc.) Higher investment – lower running costs	Normally cheaper in the short term More expensive when taking into account all related costs Lower investment – higher running costs
Availability	Infinite No depletion	Finite Depleting
Environment	Less pollution (Large-dimensioned projects may trigger environmental concerns)	High level of pollution

Saving energy

Which form of energy is the most eco-friendly? Not using energy!
There is no (technical) use of energy without any impact on nature. It is absolutely improbable that human beings will completely stop using energy, so we must fulfil this need as sustainable and clean as possible.
One kWh avoided to spend is 'greener' than any kWh, even produced by clean energies. Saving energy by using better technology or by doing without a device should be the first priority, producing green energy the second.

And what can I do as an individual to save energy? We invite you to make your own list! These are just a few ideas from our side, but there are many, many more:

- Turn off any device which is not giving benefit to anybody at this moment. Why have the lights on in a room where there is no one? Why have a TV running if no one is watching? Why heat or cool unused rooms?
- Exchange or ask your family to change too old household appliances like the fridge.
- Have a walk through your house, find energy consuming devices and ask yourself for each and every one of them: Is it really necessary to have this 'ON'?
- When you are about to buy a new energy-consuming device: wait a few days and then ask yourself once again 'Do I really need this?'.
- Be tolerant with the temperature in your house: Use a sweater if you feel 'coldish' instead of turning on the heating, wear light cloths and set your AC device to 25°C (or stop it completely) if you feel a little hot.
- Take short showers and keep the bathtub for special occasions.
- In the kitchen: Do not fill your water kettle completely, but measure the water you need for your coffee or soup. Always use lids on your pans. Reduce the heat if your food starts boiling. Do not heat up an electrical oven for just a small amount of food. Use a solar cooker :-) .
- Production and transport of our food needs a lot of energy. Buy local food, eat seasonal fruits and vegetables, keep and eat your leftovers, make your own (even little) garden, eat less meat, …
- Wash cloths as cold as reasonable (not 'as hot as it survives'), do only run a washing machine when you have enough cloths for a complete load, hang your shirts to air or sun dry on a string.
- Each time you have to travel somewhere, try to find the means of transport with the lowest impact on the environment: Walk or use your bike for short trips, use public transport for longer ones. Organize a 'car pool' with colleagues from work if public transport is not efficient to bring you to your workplace.
- Plan your holidays and leisure activities 'eco-friendly' – find places less far away, travel by bus or train.

2.2 All about solar energy

The sun is in the centre of our lives. Not only because it is physically the centre of our planetary system, but also because it is the source of all energy on earth. Plants can't live without sunlight, as it is absolutely needed for photosynthesis. Animals and humans need it for their well-being, for a moderate temperature of their environment and a functioning metabolism.

How much solar energy reaches the earth?

The amount of solar energy reaching the surface of the earth is so huge that in a year, it is about twice as much as we will ever be able to obtain from all of the earth's non-renewable resources – coal, oil, natural gas, and mined uranium – combined. Or, to give another comparison, the solar energy reaching the earth in one hour is equivalent to about one year of the world's total energy consumption.

No doubt, it is an enormous amount of solar energy that reaches the earth every year! Nevertheless, solar energy covers nowadays only about 2,3% of the world's electricity production (2017). The potential is huge, and even if the entire world's energy consumption would be covered by solar energy only, we would use not more than a very small amount of the total energy that reaches the earth. Although solar energy is not available all the time, the distribution is not equal in all regions and it is not 100% predictable due to weather and climate, there are technological solutions to deal with that: Statistical irregularity can be equalized by combining different sources of renewable energy, by connecting different regions by power lines and – to some extent – by storing energy.

In our daily life, we use more solar energy than we are aware of: We use daylight for our activities and use sun rays to dry our laundry or to heat our houses. We need sunlight even for our health, to produce vitamin D in our skin and to make us happy. Sun drying of agricultural products is an ancient tradition which is still widely used (cereals, legumes, coffee, cacao, fruits, etc.). The sun helps to produce salt from the sea, to bleach white textiles, etc.

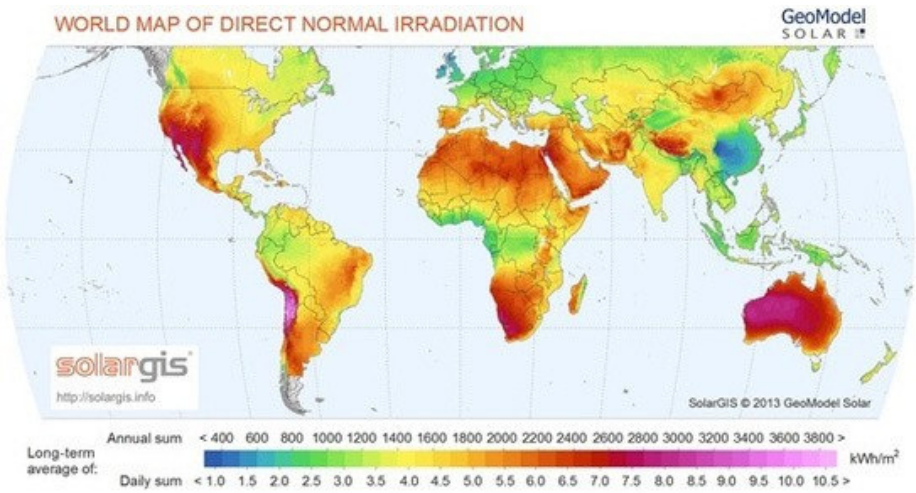

Overview of the amount of sunlight that hits the surface fo the earth.

As can be seen in the image above, the irradiation is not the same in different locations in the world.
This is due to 'geometry' (angles between the sun and different areas of the world) and to 'climate' (some regions have more clouds than others).

The local irradiation can be found on www.gaisma.com

How can we use solar energy?

There are two main ways how we can use solar energy: By utilising the radiation and heat the sun produces, and by producing electricity through solar cells. Both (thermal and photovoltaic) can be used directly or with an intermediate storage of the energy (as heat or as electricity).

The following sections will show you first how to produce heat out of sunlight and later how to produce electricity.

Producing heat from sunlight

The functional principle of using sunlight for thermal use is simple, but has a high impact. A solar collector "collects" solar radiation and heats up a heat carrier – the heat can then be used for different purposes.

Heating houses and household water

Very common are solar water heaters (SWH): The sun directly heats the water contained in a dark 'container' (copper pipes attached to a black metal sheet in the collector, for instance). The hot water can then be used in the household or business or to heat a building.
Besides the collector, a tank (heat accumulator) is needed to store the warm water. The spatial separation into 'production' (collector) and 'storage' (tank) of hot water makes the solar water heater more efficient (the 'storage' side can be better insulated).
Small hot water systems run without a pump, due to convection that moves the heated and less dense water upwards.
This phenomenon is called 'thermosyphon' (image below). The tank must always be located higher up than the collector for this system to work.

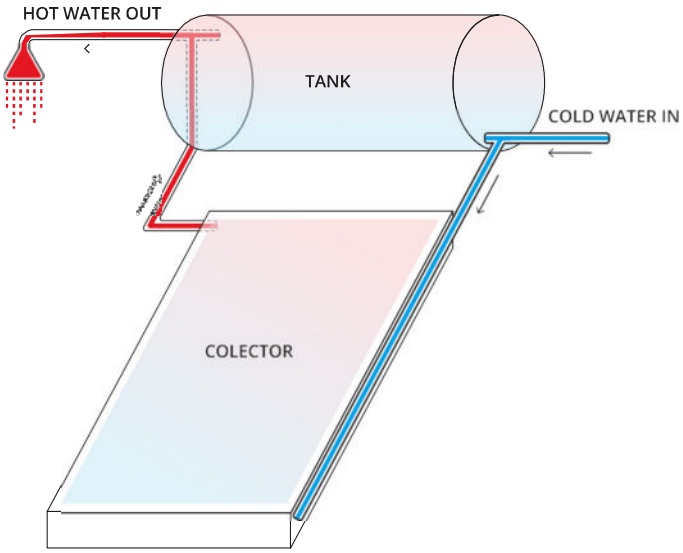

Thermosyphon flow

More complex systems have two separate circuits:

- one for the tap water heated in the tank
- a second circuit for the collector fluid (which contains anti-freeze agent)

The reason for a second circuit is the danger of freezing of the collector pipes (which destroys them) in winter at night. The simple systems from the paragraph above can only be used in areas where the temperature never falls below zero degrees Celsius or 32 degrees Fahrenheit.

Remark: Swimming pools can be heated with this method, as well.

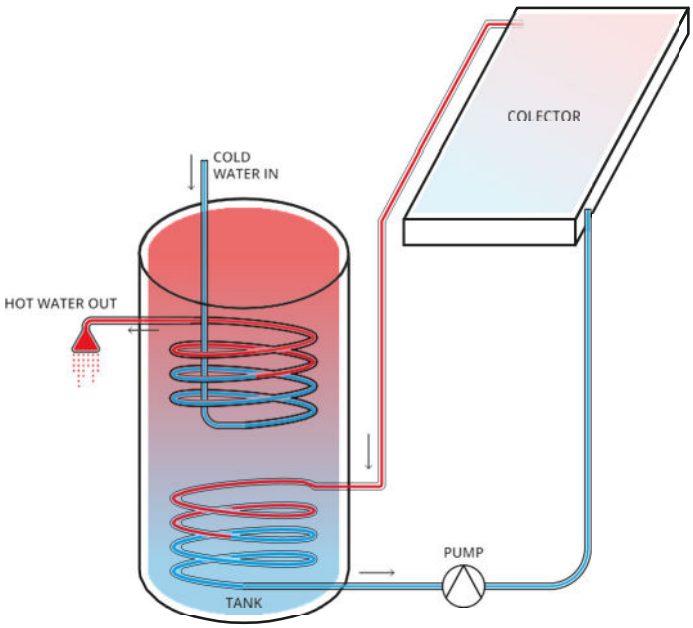

Solar thermal system with two circuits and 'antifreeze' collector fluid

Cooking and conserving food

There are different devices for using solar energy for cooking, which we call 'solar cookers'. They can be classified as: Box cookers, parabolic cookers, panel cookers and vacuum tube cookers.

Solar box cookers need more time to heat up than parabolic cookers – therefore, they are a good solution for meals like bread, cakes or beans that don‘t need quick temperature changes and can be left in the heat without opening the box during a rather long period of time.

Parabolic mirror cookers, on the other hand, produce heat quickly and can therefore be used to roast and cook things like pancakes, pasta or meat.

Panel type solar cookers are the easiest to build and most of them are foldable, so they need very little storage place. They are in general less efficient than the other presented cookers.

Vacuum tube cookers did only show up on the market in the last few years. They use (rather high-tech) vacuum glass tubes that are similar to those of some solar water heaters, but shorter and thicker. They can cook very quickly, but the quantity is limited and the tube is rather delicate.

Solar box cooker

Parabolic mirror cooker

Solar panel cooker (cardboard version)

Vacuum tube cooker

More information about solar cooking can be found on: http://www.solarcooking.org

In places where people are used to cooking with wood, all methods can be combined with an efficient wood stove, as solar cooking cannot cook *all* meals, due to weather limits. The technology of efficient stoves saves wood and reduces smoke drastically.

Another possibility are **solar food dryers** (image below). These apparatus use the sun to heat air which then dries all kind of food like fruits, vegetables or even meat and fish. Compared to laying out the food in the direct sunlight (which is done on large scale for coffee, cacao, beans, cereals, etc. - food which is not eaten raw), the food is well protected in a 'technical' solar dryer which allows a more hygienic production of dried fruit etc. These products are safe for eating raw. In larger dryers, even industrial production is possible.

'Tunnel type' solar dryer on a rooftop in Mexico (opened to show the fruit inside)

Producing electricity from sunlight

Electricity can either be produced directly from photon to electron movement using photovoltaic solar panels, or by producing heat first (using light concentration and thermal absorbers) and transforming this heat into electricity (through steam and a turbine, for instance).

Photovoltaic use of solar energy

A solar cell is a device that directly transforms sunlight into electricity. And how does that work? In a simplified way, you can imagine that a photon from the sunlight 'hits' an electron which starts moving within the cell. The cell has a built-in electrical field which 'pushes' the free electron to one surface of the cell (which we call the negative side, normally the front side of the cell). If we connect an electrical conductor (a cable) from this negative side to the other side (back side of the cell, which we call positive side), the electron leaves the solar cell and starts moving through the wire. The electrons move with a certain force which we call 'voltage'; the number of moving electrons we call 'electrical current'. The combined effect of 'voltage' and 'current' we call 'power'. The electrons therefore 'transport' power which can run a device – if we connect it to the electrical circuit.

Each solar cell can only produce a small voltage; there is a physical limit. In order to get higher voltages (which can be used more easily in technology), solar cells are connected 'in series', one after the other. To protect the 'string' of interconnected solar cells from corrosion etc., it is glued behind a sheet of glass and covered on the backside with a weather resistant material. The complete assembly is called a solar panel.

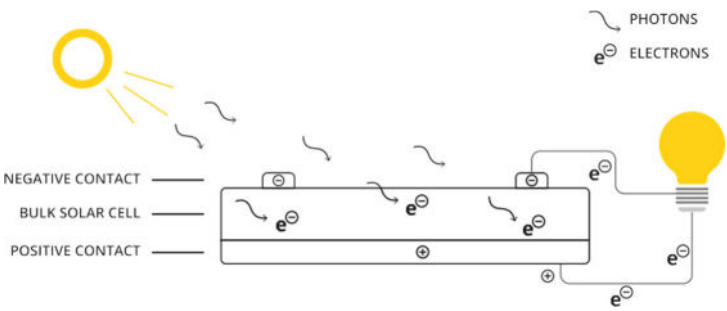

A solar cell

A solar panel

The produced electricity can be used in two different ways: It can run a completely independent solar system (which needs a battery to store energy for the night) or it can be connected to the public power grid. In the latter case, the grid serves as virtual battery. Any excess solar electricity is delivered to the grid (and used by your neighbours), while at night, you get electricity back from the grid.

Off-grid photovoltaic system

You need a solar panel, cables, a battery for storage (for low insolation times or nights) and a charge controller to provide a longer life for your battery.

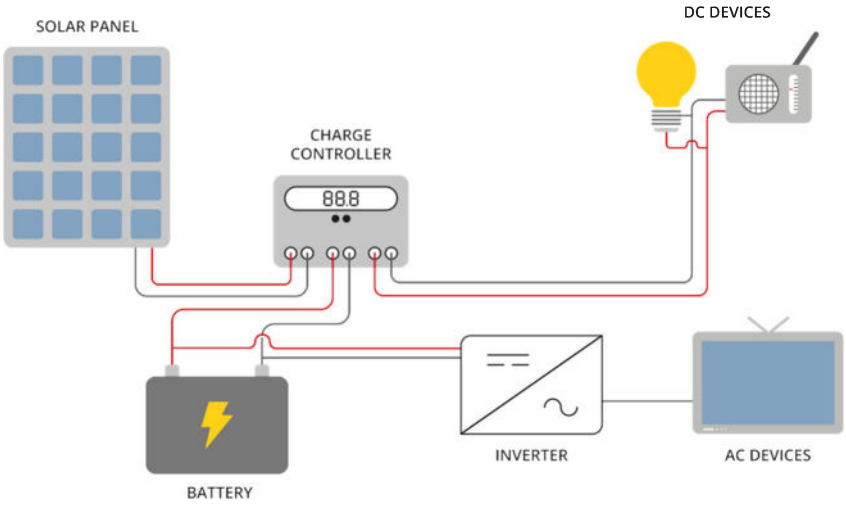

Grid-connected photovoltaic system

You need a solar panel, cables and an inverter. This system needs no storage, as the public grid is taking over this function.

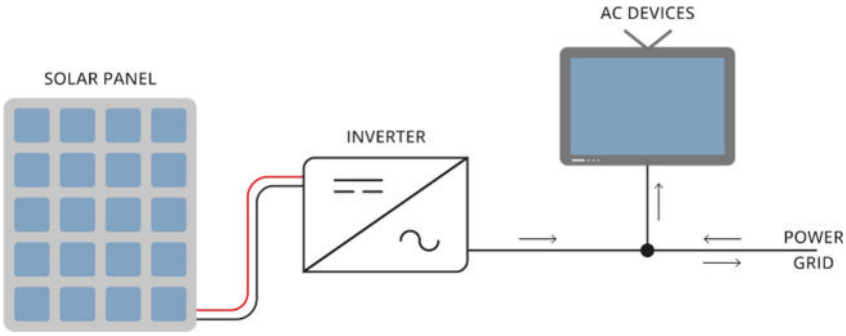

Concentrated solar thermal energy

Concentrated Solar Thermal ('CST') is only used in large power plants. Huge mirrors concentrate sunlight into a single line or point, creating very high temperatures. This heat is used to generate steam. The hot and highly pressurised steam is used to power turbines, which generate electricity (solar power plant).

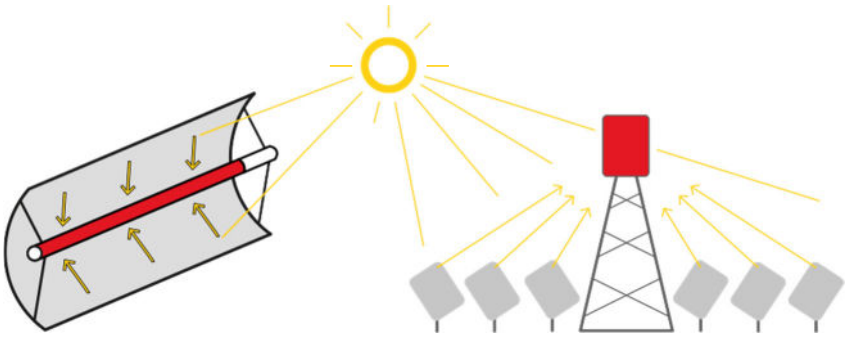

"Concentrated Solar Thermal' power plant

Direct use vs. storage

Whether it concerns heat or electricity, the energy from the sun is only available during daytime, as long as the sun is shining. The intensity is not constant – due to weather, seasons and varying angles of the sunrays during the day.

For cooking and drying, we normally use direct systems that use the energy at the very moment it is "produced" (when the sun is shining on our device). Regarding electricity, direct use applications are rare. They are mainly pumping water and powering fans.

As we also need energy during the night, we need to store it. Storing hot water is rather simple, using an insulated water tank. Storing electricity is a little bit more complicated. Usually, the energy is stored in rechargeable batteries, which vary in type (chemistry), power, size, etc. Batteries are delicate and their charging and de-charging (= use) must be done in a controlled way, for safety reasons. This task is executed by a 'charge controller'.

Misconceptions about photovoltaic solar energy

#1: The lifetime of a solar panel is too short for any reasonable energy output

A photovoltaic panel has a lifetime of approximately 30 years of constant energy production. After this time, it still can produce electricity, but the efficiency will be reduced. Technical developments constantly increase both the efficiency and lifetime of solar panels.

#2: The energy consumed during production is larger than the energy generated

The offset of the „grey energy" (all energy used for production) of a solar panel is approximately two years. This means that in two years, the energy generated by a solar panel is equal to the energy that has been used to produce this solar panel.

#3: A solar panel releases more CO2 during its production than it can compensate

On the CO2 emissions side, a solar panel with a typical 30 years lifespan pays back its production-related emissions in 1,3 years' time.

#4: Solar panels are environmentally unfriendly, as they contain toxic materials

As with every industrial product, the production of solar panels is generating an impact on the environment. Compared to other means of producing energy, this impact is lower. (Remember: Not using energy is still more eco-friendly than any 'clean' energy). The common type of silicon solar cells does not contain heavy metals or highly toxic materials. They might contain aluminium, silver and tin.

On the other hand, there are toxic solar cell technologies. Among them are Gallium Arsenide cells which are only used in very small numbers in space applications; they are too expensive to be sold 'on earth'. Another critical technology is Cadmium Telluride. This type of solar cell is commercially sold in smaller numbers and should be avoided.

#5 Solar panels are OK, but they require batteries which are ecologically unfriendly and toxic

It is true, in most solar systems we use batteries that store the electricity for the night or cloudy days. It is also true that batteries are based on metals that are produced in mines (often related to pollution, huge consumption of water, destruction of large areas of land, abusive assignation of mining rights in indigenous areas, etc.) and whose recycling is not always done efficiently. Battery weight (and material use) is often higher than solar panel weight in a solar system.

In stationary systems, mostly lead-acid batteries are used. While lead is toxic and a huge amount of it is used in battery production (a lot of them are car starter batteries), this technology has a long tradition and is well mastered. Recycling schemes are set up and working in most areas of the world – actually, there wouldn't be enough lead available for all the cars in the world without them!

In mobile applications, lithium-ion batteries are favoured nowadays. This is a young technology (commercially started in 1991), and lithium mining is growing at a very fast pace (mainly for electric cars) – leading to the mentioned problems related to mining. Lithium salts are toxic and can easily pollute ground water and rivers. In the battery, lithium is combined with other metals, depending on the application. Some batteries use the highly toxic and problematic element of Cobalt, while others use less problematic Manganese, Nickel, etc.

Being a relatively new technology, the recycling of lithium-ion batteries is still not completely mastered nor commercially interesting. Nevertheless, in industrialized countries, recycling plants are getting more common and hopefully laws will require a higher percentage of those batteries to be recycled.

The same rule applies for batteries as for solar panels: Not using (and not storing) energy is still more eco-friendly than any 'clean' energy!

2.3 Impacts of the sun on health & environment

Although we need the sun and its energy for our survival, it can also cause some problems for humans and other living species. We need to protect ourselves from too much sunlight. Solar energy is a major factor in the equilibrium of our climate, and the current change in equilibrium has been attributed to human activity.

"THE DOSE MAKES THE POISON" (Paracelsus)

The greenhouse effect

What we call global warming is a relatively recent phenomenon. Over the last few decades, the surface temperature of the earth has been rising at almost twice the rate of the last hundred years. This effect has even been growing faster in this millennium, 2014-2019 have statistically been the five hottest years in (recorded) history. This rise in temperature is directly connected to the dis-equilibration of the greenhouse effect.

Life on earth is only possible because of the earth's atmosphere, a layered mix of gases that envelopes the planet. Without the atmosphere, the average temperature on earth would be -18°C/-0.4°F (instead of ca. 14°C/57.2°F). The most important of the greenhouse gases is water vapour.

The rays of the sun easily penetrate the atmosphere. Sunlight is absorbed by the earth and transformed into heat. However, instead of escaping through the atmosphere, some of the heat radiating off the earth is trapped by greenhouse gases and reflected back to the surface. This feedback mechanism heats up the planet even more.

Let's get things clear: Not the greenhouse effect itself is a problem for mankind, but the fact that the effect's equilibrium is getting out of control. The reason for the latter will be explained below.

There is a difference between the natural greenhouse effect and the greenhouse effect caused by human activity -> **the growth of the latter drives global warming.**

About 60% of the natural greenhouse effect is caused by water vapour.

Parenthesis: Global warming fosters this greenhouse effect even more, by increasing the evaporation of water. The warmer it gets, the more water vapour is emitted into the atmosphere, the warmer it gets because of this… and so on.

Carbon dioxide (CO2) causes 9 - 26% of the natural greenhouse effect, compared to 60% of the man-made greenhouse effect, hence the great importance attached to reducing CO2 emissions. Unlike water vapour, we can directly influence these emissions. We generate CO2 by burning fossil fuels (transport, heating, industry and power generation) – or avoid its generation by using renewable energies.

About 20% of the man-made greenhouse effect are caused by methane emissions (cattle industry, agriculture). We can curb methane emissions by consuming less meat and milk, and by reducing our use of fertilisers.

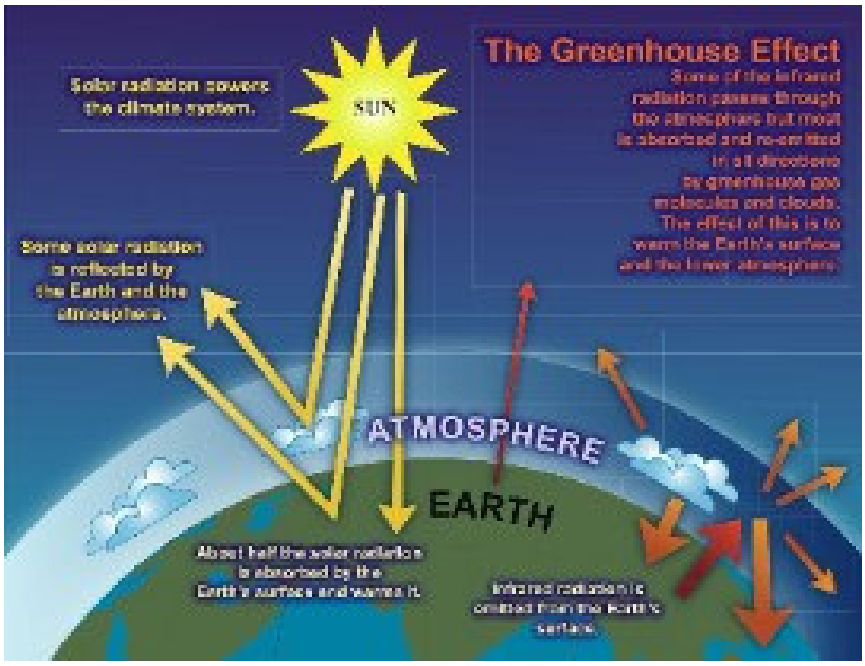

The greenhouse effect
(https://www.ipcc.unibe.ch/publications/wg1-ar4/faq/wg1_faq-1.3.html)

Our health

UV-Rays

The sun provides us with many vital functions. Keeping temperatures at an agreeable level is just one of them.

We need the rays of the sun on our skin to produce enough vitamin D. But the sun is also important for our mental health, especially in northern countries, where sunlight is scarce for several months (people with depression can be fortified through light therapy).
Nevertheless, the sun also has its dangers. The UV rays of sunlight can damage our skin, no matter if it is dark or light; everybody can get skin cancer.

UV-A radiation is chiefly responsible for the ageing of our skin and affects even the deepest layers of our skin. UV-B radiation causes sunburn, but in the longer term it tans the skin and leads to a natural protection from sunlight. UV-B radiation also helps preventing cancer (including skin cancer).

Depending on the intensity of the radiation, the body may suffer temporary (sunburn) or permanent damage (skin cancer). Tanned or dark skin offers slightly better protection than light skin. Sunscreen increases the self-protection of the skin. However, depending on the Sun Protection Factor (SPF), sunburn or skin cancer may still occur. Also in this case, the atmosphere plays an important role, because it's ozone content absorbs a major part of the damaging UV radiation. The ozone level varies throughout the year and there may be seasonal peaks of damaging UV radiation, especially at the North and South Poles.

Heat & Hydration

On a sunny day, we may suffer if our body is exposed to too much heat. If we do not take precautions to protect ourselves, the result can be a sunstroke (also known as heat stroke). A sunstroke is considered a medical emergency! This means, the affected person should seek medical attention. For more details, see the section 'First Aid'.

A sunstroke occurs when your body is not able to regulate your body temperature anymore, due to excessive exposure to heat. A factor that increases this risk even more is dehydration, which means that your body excretes more water (through urination and sweating) than it takes in.

2.4 GO SOLAR!

All over the world, there is an urgent need to reduce CO2 emissions. It is all about getting involved to make a difference.

A person who uses renewable energy saves non-renewable energies. As a leader, you can be a good example and motivate others:

WE ARE NOT 'A DROP IN THE OCEAN' BUT
A '**CONSTANT DRIPPING THAT WEARS AWAY THE STONE**'.

With this handbook, you can get the ball rolling by creating more awareness of solar energy, which is affordable and available for everyone. At the end of the Handbook, you can find a list of links to organisations and projects where you can learn more about solar energy.

Install a photovoltaic system

Build a solar torch

Cook your food with solar energy

3. SAFETY AND FIRST AID

3.1 Be safe & sound

General remarks for a safe execution of the activities

This Handbook and the Experiments Database (plus Workbook) are designed to support you by providing a variety of solar activities.

Please read the following notes to ensure that the activities are safe for you and your group as well as for the environment.

Remarks related to the sun(light):

- Never look directly at the sun.
- Be particularly careful with mirrors, lenses and other reflecting material in direct sunlight. Don't leave them unattended. Place them in a shaded space or cover them after use.
  - When using mirrors, lenses or other reflecting materials, always protect yourself from UV rays.
  - Use strong sunglasses for all experiments using reflecting materials or lenses. Use very strong sunglasses when watching the focal point of sunrays ('solar art' experiment).
- When producing heat through sunlight, be sure that you protect your body from burns. Don't touch hot objects with your hands or fingers.
- Always apply sunscreen and wear a hat when working under direct sunlight.

General remarks:

- Wash your hands after every activity.
- Make sure that everyone drinks enough water.
- Don't taste things unless you are certain they are not poisonous.
- Don't drink water from natural sources unless you are sure it is

  safe.
- If you want to take pictures or videos of your activities, make sure that everyone in the picture or video (or their parents) has given her/his permission before you publish it.
- Treat nature and your environment with respect.
- Be careful when working with plants or animals. Wear protection if necessary.
- Whatever activity you do in nature, don't leave any trace: Keep your impact on nature as low as possible, never leave any waste, avoid digging trenches, cutting branches from live trees or removing natural items.
- Recycle or reuse the materials used in the activities as much as possible.

Rules for working with electrical equipment

1. Avoid contact with energised ('live') electrical circuits. Treat all electrical devices as if they were live or energised.
2. Disconnect the power source before servicing or repairing electrical equipment.
3. Use only tools and equipment with non-conducting handles when working on electrical devices.
4. Never use metallic pencils or rulers, or wear rings or metal watch bands when working with electrical equipment. This rule is very easy to forget, especially when you are showing some electrical part by pointing at it with a metallic pencil.
5. When it is necessary to handle equipment that is plugged in, be sure that your hands are dry and, when possible, wear non-conductive gloves, protective clothes and shoes with insulated soles. Turn over or cover a solar panel that cannot be disconnected.
6. If it is safe to do so, work with only one hand, keeping the other hand at your side or in your pocket, away from all conductive material. This precaution reduces the likelihood of accidents that result in current passing through the chest cavity.
7. Minimise the use of electrical equipment in cold rooms or other areas where condensation is likely. If equipment must be used in such areas, mount the equipment on a wall or vertical panel.
8. If water or chemicals are spilled onto equipment, shut off the power at the main switch or circuit breaker and unplug the equipment. Never try to remove water or chemicals from an equipment that is energised.
9. If an individual comes in contact with a live electrical conductor, do not touch the equipment, cord or person. Disconnect the power source from the circuit breaker or pull out the plug using a leather belt. Stay very calm in order not to make the situation worse. Like in previous rules – always disconnect the power first. See the section 'First Aid (electrical shock)' for the next steps.
10. Equipment producing a 'tingle' should be disconnected, reported promptly or sent for repair.
11. Do not rely on grounding to mask a defective circuit nor attempt to correct a fault by inserting another fuse or breaker, particularly one of larger capacity.
12. Drain capacitors before working near them and keep the short circuit on the terminals during the work, to prevent electrical shock.
13. Never touch another person's equipment or electrical control devices unless you are instructed to do so.
14. Enclose or tape protect all electric contacts and conductors so that no one can accidentally come into contact with them.
15. Never handle electrical equipment when your hands, feet or body are wet or perspiring, or when you are standing on a wet floor. Remember to wear gloves and shoes.
16. When it is necessary to touch electrical equipment (when checking for overheated motors, for example), use the back of your hand. Thus, if accidental shock were to cause muscular contraction, you would not 'freeze'.
17. Do not store highly flammable liquids near electrical equipment.
18. Be aware that interlocks on equipment disconnect the high voltage source when a cabinet door is open, but that power for control circuits may remain on. Read the single line diagram and wiring schemes – know your switchboard.
19. De-energise open experimental circuits and equipment if you leave it unattended.
20. Do not wear loose clothing or ties near electrical equipment.

3.2 First aid

It is important to know where and how you can get medical help. Be prepared for the unexpected!

Electrical shock

1. Call the medical emergency service.
2. Separate the person from the current source (see rule 10 for Electrical Equipment).
3. Do CPR (Cardiopulmonary Resuscitation), if necessary.
4. Check for other injuries.
5. Wait for medical emergency service.

Burning

1. Immediately cool the affected area in cool water for 15 minutes.
2. Cover with a plaster. No cream is needed.
3. If the burn is more than 8 cm/3 inches in diameter, seek medical attention.

Burning by a soldering iron is usually a serious and very painful burning, although only a small surface is affected. Even if the iron is touched for half a second only, seek immediately to cool the burned area. Pain may only be realised after a while, but immediate cooling is important!

The burnt skin should be protected to prevent infection and inflammation.

Sunstroke

Signs (you can observe) of a sunstroke:

- High body temperature
- Sweating stops
- Red, hot and dry skin
- Rapid heartbeat
- Rapid breathing or hyperventilation
- Confusion, disorientation and other behavioural changes
- Unconsciousness
- Muscle cramps
- Vomiting

Symptoms (the patient describes):

- Headache
- Dizziness
- Feeling hot/fever

You might observe that a person has some discomfort before reaching a heat stroke.
Immediately seek to cool and hydrate the patient to avoid more severe symptoms as described above.
If the person shows signs of a sunstroke, be careful with rehydration and follow medical advice. To give something to drink to the patient can cause vomiting and be a risk if the patient loses consciousness.

The body is in a shock state (like after losing a lot of blood).

What to do in case of a suntroke

1. Contact the medical emergency service.
2. Move the person to a cool, shady area.
3. Try to cool the person's body core temperature, for example with a fan while wetting the skin. Apply cooling packs on armpits, groin, neck or back.

Risk factors and precautions

A) Dehydration

Drink plenty of water to keep your body hydrated.

Avoid caffeinated and alcoholic drinks (they dehydrate the body).

B) Exposure to heat

Stay in the shade and avoid being outside for the hottest time (11 AM to 3 PM) of the day. If you have activities outside, wear a hat that shades face, neck and ears, and light-coloured, loose- fitting clothing.

You might want to provide drinks and sun hats for your group during activities.

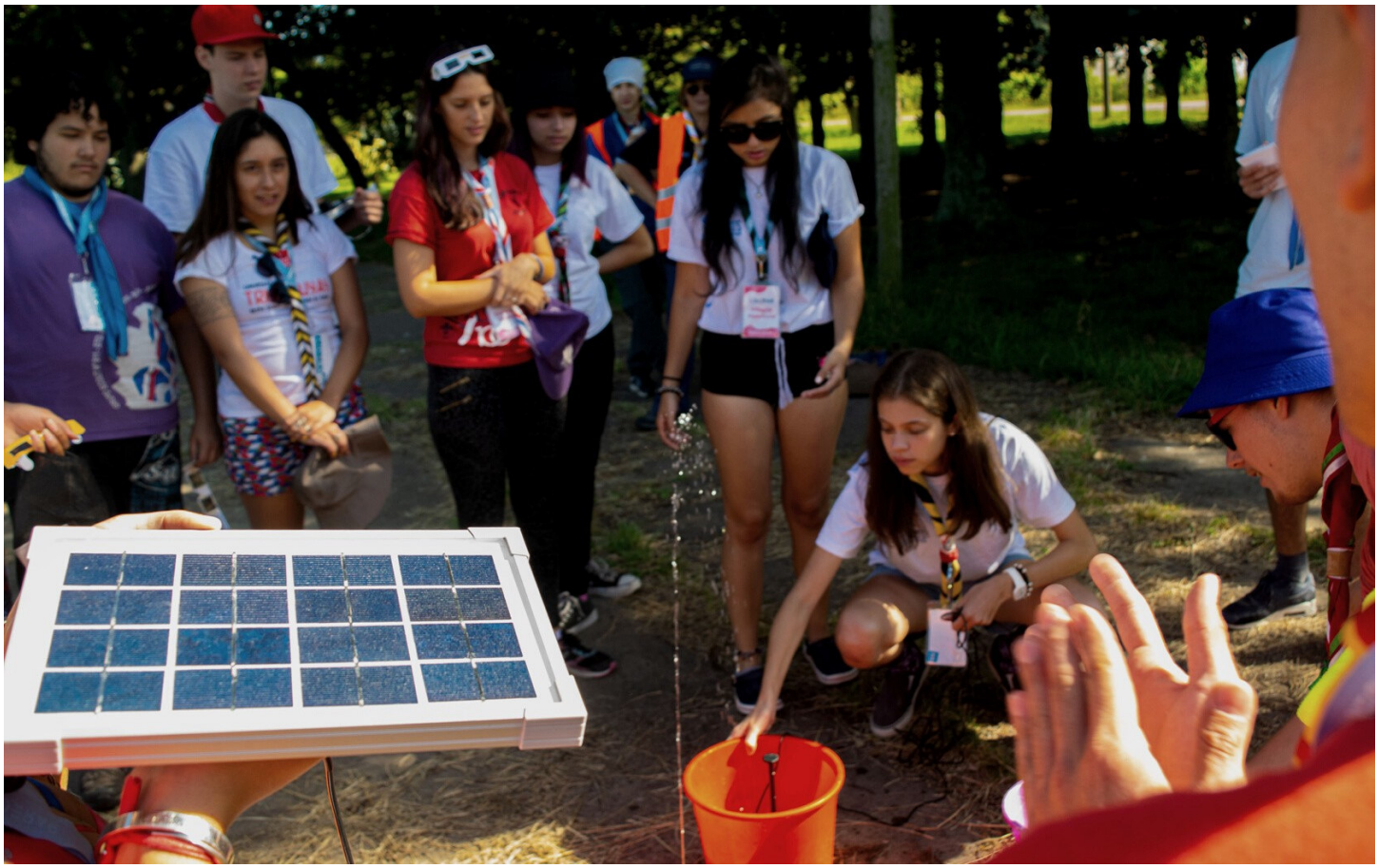

4. EXAMPLES OF EXPERIMENTS AND WORKSHOP STATIONS

4.1 How can you best prepare your group activities to promote behavioural change?

- Lead by example.
- Focus the aim of your activity on specific and achievable behavioural change e.g. 'Turn off the light when leaving a room' rather than 'Save energy'.
- Encourage action planning and empowerment. Put young people in charge, let them choose their own activities and hand over to them the planning of how to put it into practise.
- Challenge current negative behaviour and tackle barriers to action.
- Encourage participants to scrutinise their current behaviour and to think about how it could be changed.
- Everyone has excuses for why he/she doesn't behave in a particular way. Encourage young people to voice these excuses and then find ways around them.
- Practise skills until they become a habit.
- Spend time outdoors.
- Get families and communities involved.
- Make a public commitment.
- Monitor change and celebrate successes.

4.2 Tips for undertaking activities with your group

- Plan ahead. Some activities may need preparations to be made a week before you execute them (e.g. What is the energy consumption of your household?).
- Be prepared. Read the instructions of your planned activity a week before, to have enough time to get the necessary materials or to do research.
- Assemble all materials or check if the material is functioning and available for your activity.
- Get to know as much as possible about your topic. Naturally, children are very curious and ask questions you may not expect.
- It is always good to test an experiment if you have never done it before, to see if it works in your circumstances, especially the solar radiation and the weather in your region.
- Plan alternative activities in case there is no sunshine.
- Take safety precautions.
- Focus on a good balance between theoretical input and activity for the participants.
- If the group is very interested in a particular topic, do not interrupt them to stay with your 'plan'. Self-motivated learning is most effective, support this.

4.3 Examples of activities/experiments

Scouts go Solar counts with a large and still growing number of experiments for scouts and other people who are curious to discover the 'magic of the sun'! Several of them are described in the Action Kit of the Scouts go Solar Challenge of Earth Tribe and the Solar Workbook, others are part of the growing SgS Experiments Database on the Facebook page of Earth Tribe (*https://www.facebook.com/groups/TheEarthTribe/learning_content*). Feel free to follow these instructions and to try out the experiments with your scout group or other groups of people. Later, you can share your experience in the comment function of the database. At the same place, you can also upload some pictures, to help and inspire other group leaders.

Examples:

4.4 Example of an introduction workshop /roadshow

An introduction workshop – in Asia they are called Roadshows – is typically a combination of short explanation, a kind of 'show' and some experiments. Different aspects of solar energy are treated in a series of 'stations'. The participants circulate in groups and attend each station for a given time (this system can be called ‘Workshop Carousel’). The experiments are the same ones that can be done with scouts or other groups – sometimes in a shorter version, to fit into the time frame.

Introduction workshops might be offered in Scout Centres by their staff or they can be organized for one or a few days in the frame of a larger event like a Jamboree, etc. A much more complete description can be found in the Workbook.

5. FURTHER INFORMATION

The Workbook and other manuals

Additional material for activities: Download the SgS Challenge Implementation Manual, SgS Action Kit, instruction sheets and more practical material in different languages on https://earthtribe.scout.org/challenges/scouts-go-solar and on www.solafrica.ch/scout-badge

Find details and more about the experiments on the Scouts go Solar Experiments Database on https://www.facebook.com/groups/TheEarthTribe/learning_content

Solar energy

- More information and pictures prepared for kids: https://www.eia.gov/kids/for-teachers/
- More experiments, including construction plans and background information: www.re-energy.ca

Instructions for solar cookers

http://solarcooking.org/plans/

- Solar box cooker
- Parabolic cooker
- Panel cooker

Instructions for solar water heating

http://www.builditsolar.com/Projects/WaterHeating/water_heating.htm

- Solar shower
- Thermosyphon
- Others

Instructions to build a sundial

http://www.sundials.co.uk/projects.htm

Related organisations

- www.greenpeace.org
- www.scout.org
- www.solafrica.ch/scout-badge

Solar Energy Handbook

This **Solar Energy Handbook** is designed to help create awareness, increase knowledge and develop the skills of children and young people with regard to solar energy. It aims to help group leaders or teachers to identify, plan, prepare for and realize solar learning opportunities. The handbook offers basic background and safety information about solar energy and gives an introduction to activities for groups, hands-on-experiments and workshops. It also includes a list of complementary/related publications and links about where the instructions, constructions plans etc. can be found.

It's first edition has been developed by Solafrica with the support of Greenpeace, YUNGA and the World Organization of the Scout Movement (WOSM), which endorses this educational badge framework for use by Scouts around the world.

The edition of the current second version has been coordinated by Solafrica, in collaboration with active Solar Ambassadors.

SOLAFRICA
Bollwerk 35 | 3011 Bern | Switzerland
info@solafrica.ch | 031 312 83 31

SOLAFRICA